BVT TECHNOLOGIES, a.s.
www.bvt.cz
info@bvt.cz

Acetylcholinesterase BIOSENSOR

Type: AC1.AChE

Description

Acetylcholinesterase from electric eel type VI-S is immobilized on the active surface of a working electrode of electrochemical sensor AC1.W2.RS (i.e. Platinum working electrode, silver reference electrode). The diameter of the immobilized bioactive membrane is 2 mm and the mean applied activity is 1 unit/mm^2.

Physical parameters

Dimensions:

Weight:	0.4 gms
Length:	25.40 mm
Width:	7.26 mm
Thickness:	0.63 mm

A = 4.00 mm
D_W = 1.00 mm

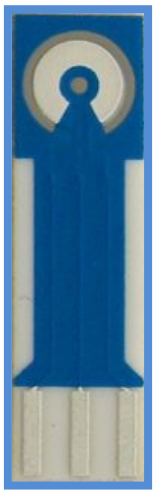

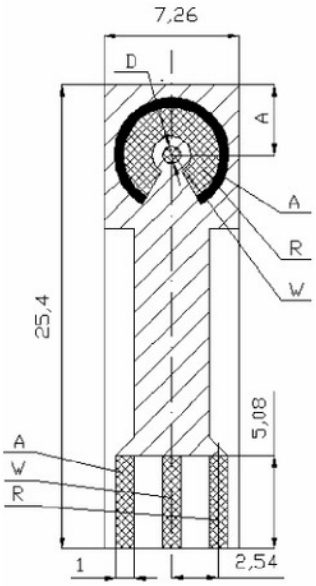

Electrode Materials are defined by:

AC1.W2.RS

W... Working electrode – pure platinum
R ... Reference electrode – silver
(Detailed description of sensor: datasheet **AC1.W*.R* (*)**)

On the surface on the working electrode is an enzymatic membrane containing 1 IU (Unit) of AChE enzyme, which is immobilized.

Unit definition - Acetylcholinesterase from electric eel

- AChE
- True cholinesterase
- EC 3.1.1.7
- Sigma Aldrich – type VI-S
- One unit will hydrolyze 1,0 µmol of acetylcholine to choline and acetate per minute at pH 8 and temperature 37 °C.

BVT TECHNOLOGIES, a.s.
www.bvt.cz
info@bvt.cz

Connector types for AC1.AChE sensors range

	KA1	KA1.S	KA1.C	KA4
AC1.AChE	✓	✓	✓	✓

Evaluation Unit

- PalmSense

Sensor Usage

- Measurement of AChE inhibitor concentration (organophosphorous and carbamate pesticides, toxic and neurotoxic gases (e.g. sarin), chemical weapons, …)

Expiration

3 months at temperature 0 – 4°C

Transport

Sensor are delivered in thermoboxes keeping low temperature

Ordering information

- The order reference: AC1.AChE
- Minimum order quantity – 20 sensors
- Orders in multiples of 20
- Delivery time for standard AC1.AChE sensors is 4 weeks from receipt of order
- Delivery time for non-standard AC1.AChE sensors depends on final technical specification of order

Examples of Order

- 100 pieces – AC1.AChE